SCENIC™

Environmentally Aware

Feature-Packed DSP Hearing Aid Amplifier

PRODUCT DATA SHEET

Product Overview

Scenic is a high end, fully featured 8-channel digital amplifier featuring Acoustic Scene Analysis. Within Acoustic Scene Analysis there are four advanced adaptive modules constantly monitoring and responding to the environment. Together, Impulse Noise Reduction, Wind Noise Reduction, Environmental Noise Reduction and the Adaptive Directional Microphone are optimizing their synergistic activity, providing confidence to the hearing aid wearer of their performance in even the most demanding situations. As well as Acoustic Scene Analysis, Scenic features a 4th Generation Feedback Canceller, 8-channel WDRC with 32 adjustable bands, and Live Display capability.

New to IntriCon, Impulse Noise Reduction provides protection for the wearer against sudden loud sounds. Acting immediately, the algorithm reduces the loudness of the sound to a safer, more comfortable listening level.

With two modes allowing use in both single and dual microphone products, Wind Noise Reduction can be implemented in any style of hearing aid for effective performance.

Improvements have been made to AFC, ENR, ADM and there is now much improved flexibility and usability with our new software tool, the nanoDSP™ Dashboard.

IntriCon
The Body-Worn Device Company

1260 Red Fox Road · Arden Hills, MN 55112 · TEL: (651) 636-9770 · FAX: (651) 636-8944
Kesselschmiedstrasse 10 · D-85354 Freising, Germany · TEL: 049-8161-4804-0 · FAX: 049-8161-4804-18
www.intricon.com © 2010 IntriCon Corp. · March 2010

Feature List

Acoustic Scene Analysis

- Analyzes the characteristics of the acoustic scene in order to activate and control adaptive features
- Adapts to changing acoustic scene to optimize performance for each listening situation
- Allows the adaptive systems to work in synchrony instead of independently

Impulse Noise Reduction

- Detects and suppresses sudden loud sounds
- Reduces the loudness of door slams, clattering dishes and cutlery

Wind Noise Reduction

- Detects wind using either one or two microphones
- Suppresses the unpleasant sounds caused by wind

Adaptive Directional Microphone

- Beam-forming adaptation to remove unwanted sounds from behind the wearer
- Auto-switching to omnidirectional in wind and in quiet environments
- Optimization mode for open fittings

Environmental Noise Reduction

- Twelve noise reduction bands
- Soft-squelch expansion

Adaptive Feedback Cancelling

- Patented*, Industry leading 4th generation AFC
- Adapts continuously and has excellent sound quality
- Ultra-fast adaptation speed

Digital Random Noise Generator for Tinnitus Therapy

- Can be used in mixed-mode applications: only masking, only hearing aid, or combination use

Eight-channel Wide-Dynamic-Range Compression with *Dynamic Contrast Detection*™

- Three-mode adaptive time constants to optimize WDRC performance in critical environments
- Compression ratio and threshold adjustable independently in each channel
- MPO output compression limiting is also adjustable independently in each channel

32-Band Gain Equalizer

- Ultra-fine target matching in 250 Hz band widths

Live Display

- Watch the performance of all the adaptive systems as they change – in real time!
- Useful for device testing
- Display adaptive performance on the fitting system to reinforce the patient benefits

Event Data Logging

- User Events: Power on events, VC level (correlated with ambient noise level), Program change, time in each program, Low Battery events, history of the last 16 activations
- Statistics of all of the events are logged and are made available to the fitting software

Dual Bi-quad Filters

- One filter each at the input and output for transducer compensation
- 16 options for customization

Feature Descriptions

Acoustic Scene Analysis

With a system wide architecture, Acoustic Scene Analysis controls adaptive modules based on the acoustic scene. By utilizing distributed processing rather than a centralized approach, information is spread and processed with greatly improved efficiency. Modules that are included in Acoustic Scene Analysis are Impulse Noise Reduction, Wind Noise Reduction, Adaptive Directional Microphone and Environmental Noise Reduction. The activity of Acoustic Scene Analysis is fully automatic, with the modules adapting to changes in the environment, as well as to changes in other modules. Wind for instance, activates the WNR module. The activity of WNR, in turn feeds data to the ADM which uses this information (in combination with its own wind sensors) to adapt back to an omni directional mode. Fine tuning adjustments are made directly to the individual adaptive modules, allowing each module to be optimally set for high performance in any environment.

Impulse Noise Reduction

An impulsive sound has a very fast rise time and a broadband spectrum. In order to detect an impulsive sound as fast as possible the INR algorithm monitors the signal levels at the front-end of the signal processing chain, before any frequency domain analysis is performed. When the instantaneous level rises fast and exceeds the long term peak power, then an impulsive sound is deemed to have been detected. Suppression of impulsive sounds is very fast, so that the peak is controlled. This occurs through a broadband gain reduction. Gain returns to its nominal level more slowly to preserve sound quality. The level of suppression is controlled by both the low term peak power level and the detection threshold. The gain is only ever reduced by enough to bring an impulse down the larger of these two, which reduces the chance of impulses being over-suppressed. The module can be enabled/disabled for each program and there are adjustable settings for the detection threshold.

Wind Noise Reduction

The WNR module operates in two modes: single- and dual-microphone mode. The wind detection mechanism differs between the two modes, but the amount of suppression that is applied is the same for both modes. In the single-microphone mode, the WNR algorithm compares the time-averaged, low-frequency spectrum (below 625 Hz) with the spectral levels and shape that would be expected for wind. In the dual-microphone mode, the WNR algorithm calculates the correlation between the two microphone signals. Wind is detected when the correlation between the two microphones is sufficiently low and the input level is greater than 75 dB SPL. To suppress wind, compression is applied in 32 bands (from 0 to 7750 Hz). This compression is separate to the WDRC algorithm. The kneepoints are generally shaped to follow the long-term average speech spectrum to minimize the potential suppression of speech. The attack and release time constants are 200 ms in all bands. There is the option to select the single microphone or dual microphone implementation, and there are five settings available for the suppression strength.

Adaptive Directional Microphone

This Adaptive Directional Microphone is extremely flexible, not only in its ability to adapt, but also in regards to configuration options. With a flat frequency response, there is no additional processing required to compensate for a low-frequency roll-off. The flat frequency response allows the module to be configured independently in each program, with no changes required to fitting parameters. It can be set as an omni, fixed or adaptive directional microphone. In the fixed mode, there are five options for the polar pattern. Fixed mode can be configured so that the program remains in the chosen polar pattern permanently or the program can adapt from an omni mode to the selected polar pattern when the noise level rises above a configurable threshold. In the adaptive mode, the microphones automatically adapt to omni-directional mode when worn in a quiet or windy environments. When noise is introduced, the polar pattern automatically adjusts to the optimal null position. As the noise changes in intensity from different directions, the loudest noise source is used to position the null. The threshold at which adaption occurs is adjustable, and for open ear devices, it is possible to also define a cut-off frequency, so that the directional microphone only acts on higher frequency sounds (as low frequency sounds are not amplified via the hearing aid).

Environmental Noise Reduction

The ENR algorithm utilizes modulation detection in 12 channels to identify noise. These channels are independent to the WDRC channels. Each channel has a fast and a slow detection system, which are used to identify and suppress noise. Fast-level detectors follow the speech level when speech is present and the noise level otherwise, while slow-level detectors tend to follow the noise level. The slow detectors provide long-term average estimates of the noise level and the fast detectors are quick enough to track variations in the speech level during phonemes and track the noise level between phonemes. The difference between the two is the modulation depth for that particular channel. Speech quality is maintained, because noise reduction only occurs in the channels where noise is identified. The ENR module can be enabled/disabled for each program. There are four attenuation settings available, ranging from 6dB to 15dB.

Adaptive Feedback Canceller

Scenic's 4th generation adaptive feedback canceller utilizes a patent pending technique to correctly identify and cancel feedback before it reaches an audible level. This means that there is extremely high resistance to entrainment. The feedback canceller algorithm runs continuously on the AFC filter, rather than on the signal path, preventing any distortion being introduced to the signal. The system is fast acting, meaning that even short bursts are quickly suppressed. The benefits are significantly improved sound quality, especially in music, and no compromise in Added Stable Gain or expansion settings. AFC is effective for feedback problems occurring in the full frequency range of 0 Hz to 8000 Hz.

Random Noise Generator

Scenic has an internal random noise generator that creates a psuedo-random digital noise sequence designed to mask tinnitus. The noise signal is injected at the front end of the amplifier before any signal processing. The level and frequency shape of the noise can be adjusted to suit the immediate needs of the user. Multiple frequency shape options are available, or custom filters can be created, where the filter taps are user specified. The noise can be presented in combination with the incoming audio signal, or in isolation (with audio amplification disabled).

WDRC with Dynamic Contrast Detection™

WDRC is fully configurable, with the following adjustable settings: number of compression channels (1,2,4 or 8); channel widths and cross-over frequencies; expansion and compression knee point levels for each compression channel; expansion and compression ratios for each compression channel, independently configurable MPO level limits for each compression channel; and multiple options for time constants .

32 Band Gain Equalizers

There are 32 band gain equalizers available to precisely match WDRC fitting targets in 250 Hz wide bands (Scenic's Bandwidth is 8 kHz). Adjustments are made by dragging handles directly on the graph and can be made in 1 dB steps. There is the option of choosing to have 4, 8, 16, or 32 gain handles shown on the graph.

Live Display

The ability to view the live changes of Scenic are available through the nanoDSP™ Dashboard. This capability can be added to fitting software to be used by the hearing aid dispenser during fitting sessions. Modules currently supported by Live Display are all of the Acoustic Scene Analysis Modules – ADM, INR, WNR and ENR, as well as WDRC and the AFC. Uses of Live Display include; diagnostics, performance evaluation; training and counselling; demonstrations; visualizing effects of changing settings; facilitating tuning; and supporting the replication of sounds. Live Display is a .Net application.

Event Datalogging

To assist with fine tuning, Scenic logs and stores information associated with usage and adjustments of the hearing aid. Statistical analysis of the logged data provides direct information about (amongst others) daily usage (including time spent in different listening programs); how often the battery is changed; the types of environments in which the volume is changed; how the user adjusts the volume; and how volume changes correlate to noise level. Data is updated every 10 minutes, which combined with the use of statistics, allows logging periods of several years.

Feature Descriptions (continued)

In-situ Tone Generator

Scenic comes with a programmable pure tone generator that can be used for in-situ validation of the hearing aid fitting. The tone mutes any other input signal (e.g. microphone or telecoil) so that only the tone can be heard through the aid. The tone is amplified in the same way as any other input signal according to the current fitting parameters and any enabled modules in the program. The frequency, input level and duration of the generated tone signal can be specified. The frequency options starts at 250 Hz and increase in 250 Hz increments to 7.5 kHz. The input level of the generated tone can be adjusted between 20db SPL and 90dB SPL in 1dB increments. The duration of the tone can be set anywhere between 0.5 to 10 seconds.

Stimulate Function

The stimulate function allows the user to generate narrow-band noises from the hearing aid. This feature is used during a hearing aid fitting as an alternative to the In-Situ Tone Generator. It is also useful to verify the output calibration of the hearing aid. In contrast to the input based In-Situ Tone Generator described above, the Stimulate function is output based. The duration and level of the narrow band noise can be modified so that a comfortable listening level is achieved at the chosen centre frequency. For more accurate measures, measurements can be made at the bin level. Bins can be stimulated individually or together in a sequence. Sequential stimulation allows the loudness of multiple sounds can be matched. The starting bin, number of bins, duration and level can all be modified.

User Programs

As many as five user programs are available. Each Program Tab in the nanoDSP Dashboard software has an Active Program Checkbox. To configure a device with three memories, the box should be checked for Programs 1, 2 and 3, and unchecked for Programs 4 and 5. This information will be saved in the configuration file. All of the programs can be configured independently, so that the parameters change when the user changes program.

Input Modes

Scenic has seven input modes, with most offering configurable options. MMPlus is mixed mode and either a Telecoil or DAI operates in conjunction with the device's microphones. The Telecoil and DAI can also operate independently. The DAI input is DC coupled and usually requires an external AC coupling capacitor. The Dual Microphone input mode has both microphones operating but only processes the front microphone (this is useful for use with WNR when the Directional mode is disabled). The Front or Rear Microphones can also be set to be the sole microphones in use. The Directional mode, allows complete flexibility. Here, the directional microphone can be set as a Fixed or Adaptive Directional Microphone, and there are various options available for configuration. The microphone options have internal AC coupling capacitors and are connected to inputs MIC1 and MIC2.

Biquad Filters

To customize the frequency response of a program beyond what is achievable with the equalizer, Biquad Filters are used. Scenic has two Biquad Filters – an input and output filter. Both can be configured, either with one of 15 pre-defined low and high cut settings, or with a customized setting where custom taps are set by the user.

Acoustic Indicators

To indicate that the program has changed or that the battery is near the end of its life, an audible signal can be emitted. In the case of program beeps, configurable options include having a single beep for all program changes or having a sequence of beeps corresponding to the program number being switched into; disabling audio during beeps; and the duration of the beeps. In the case of the battery warning beeps, the following can be configured; the duration of the beep, the number of warning beeps, and the number of beeps immediately before shut-down. These options are enabled and configured in the Device Configuration screen and the settings are applied across all programs. Additionally, there is the ability to modify the frequency and loudness of the beeps in each Program Screen. The beep frequency can be set anywhere between 125 Hz and 6 kHz. The loudness of the beeps can be set between 20 dB and 140 dB.

Low Battery Warning

When the battery voltage nears the end of life, the aid user can be warned with an audible signal. Options for configuration include the time between checks (in seconds); warning threshold (the parameter is set in 1/10ths volts, so that a warning threshold of 11 will correspond to a low battery threshold of 1.1Volts); time below threshold before warning (ms); and shutdown threshold (when the battery voltage falls below the level specified by this parameter, the device will shut itself down. This value is specified in units of 1/10th Volt).

Switch Configuration

The behaviour of the hearing aid switch or button can be configured in various ways. Options available are: 1) One Momentary Switch (or no Switch). The program change is accomplished by grounding the SW pad of the amplifier. Every time the SW pad is grounded, the user program is incremented, until the top program is active. The next SW grounding event causes the user program to return to program 1. Program switch tones will sound if this feature is enabled When the SW pad is grounded, the user program 1 is active. When the SW pad is open, the 2nd user program iis active. 2) One Static Switch. The static mode allows changes from program 1 to program 2 only. 3) Momentary Button and Jump Switch. Able to configure an Autoswitch mode for programs for use when the Jump Switch is closed. 4) Static Switch and Jump Switch. Different programs are activated depending on the state of the Switches. 5) Two Static Switches. In this mode it is possible to jump from any memory to any other memory (between programs 1-4) simply by changing the state of both switches.

Rocker Switch

Scenic's Rocker Switch can be used to change programs, or can be used to change programs and also also adjust the volume control. In the combined mode, the decision as to whether the volume or program changes is dependent on the length of time the button/switch is pressed for.

Automatic Telecoil and MTO Switching

A dedicated switching pad is available for applications of automatic telecoil switching or M-T-O switching. This mode is used by attaching a magnetic switch or mechanical switch from the TSW pad to GND. The 'auto-telecoil' mode is activated by setting Autoswitch in the appropriate Program Tab. In the designated auto-tcoil program, the parameters are set to activate the telecoil and adjust other parameters to the desired telecoil performance. When the TSW pad is pulled to GND, the amplifier switches to the program set by coilPGM (typically program 5) and stays there until the TSW pad is open. Then the amplifier reverts to the user memory that was active just before TSW was grounded.

Volume Control Function

The volume control can be set to one of three possible configurations. The Analog setting should be used if the device uses a standard analog potentiometer volume control. If the device contains a digital volume control connected via pullup resistors to the analog volume control input, then the Digital LSAD setting should be used. The Digial GPIO setting is used if the device contains a digital volume control with contacts connected to two GPIOs. For either Digital mode, the volume control step size can be configured be between 1dB and 6dB. To create an analog volume control, a 100kohm linear-taper VC (such as IntriCon models 11, 12, 14, 25, 26, and 35) is wired with the center terminal to the VC pad, and the ends of the VC are wired to M+ and GND respectively. The VC mode should be set to analog. To create a digital volume control, there are two options. A digital volume control wheel can be connected or two pushbutton switches can be used.

Power-on Options

To allow the wearer to place the hearing aid in the ear before it starts producing an output, a StartUp Delay can be programmed into the device. Available though any of the Program tabs, the delay is global to all programs – so changing its value on one Program tab will automatically change the value displayed on the other Program tabs. The gain slowly ramps up to its settings over a period of approximately 100 ms. If the Feedback Canceller is enabled, it starts even more slowly to ensure that there is no feedback before the feedback canceller has fully trained.

Feature Descriptions (continued)

Communication Unlock Key

A 24-bit number is set in the Device Configuration tab to ensure that only the manufacturer's fitting software can connect to defined hearing devices. This feature can be used to identify hearing aids of a given manufacturer from others, preventing unauthorized alterations and providing added security.

Manufacturer's Data Area (Scratch-Pad Memory)

There are 192 memory locations to store any hearing aid and fitting system information that is desired. Each location is 8 bits long. Typical stored items are model code, serial number, wearer information calibration constants, version numbers, etc. An extended MDA is also available. The extended area is used to store information formatted in a specific way such as device serial numbers. The data in this area can always be read out, but can only be written if a valid security key is provided. Most manufacturers do not need access to this area and should use the standard MDA area to store data.

PCB Hybrid Package Information

part number: 92147-0009 - RoHS compliant

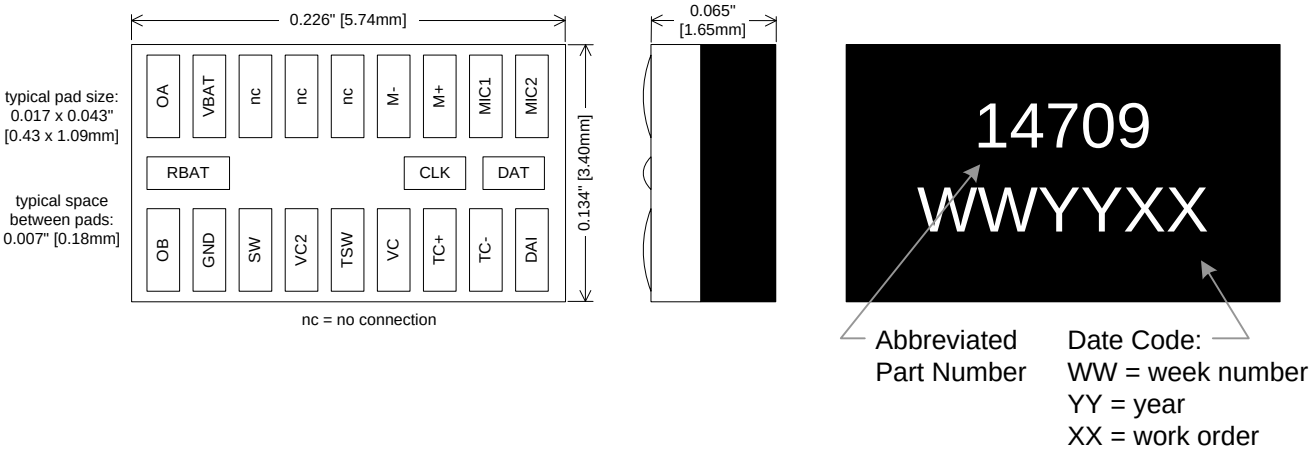

Electrical Schematic

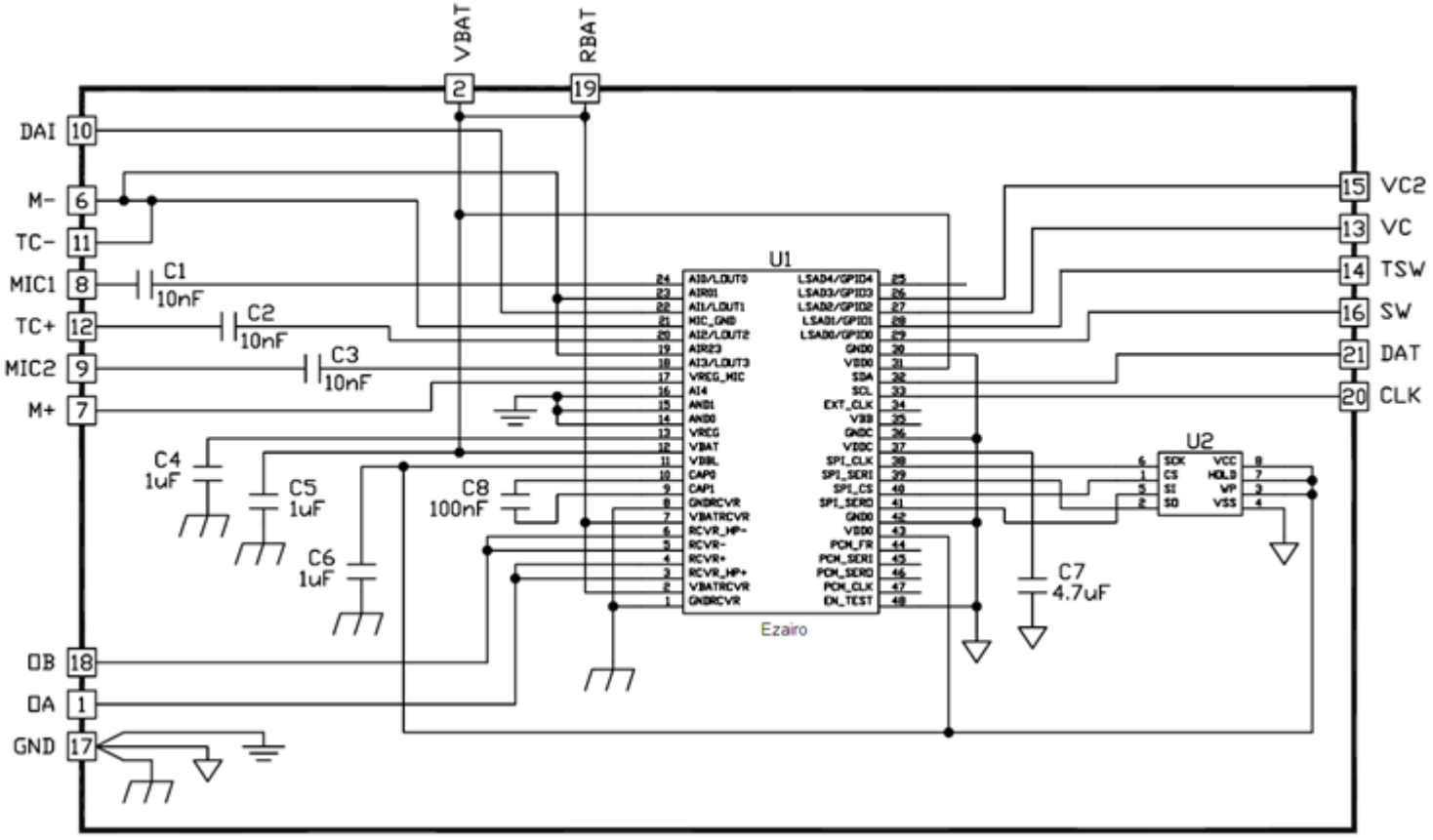

Applications

Wiring Schematic showing full features

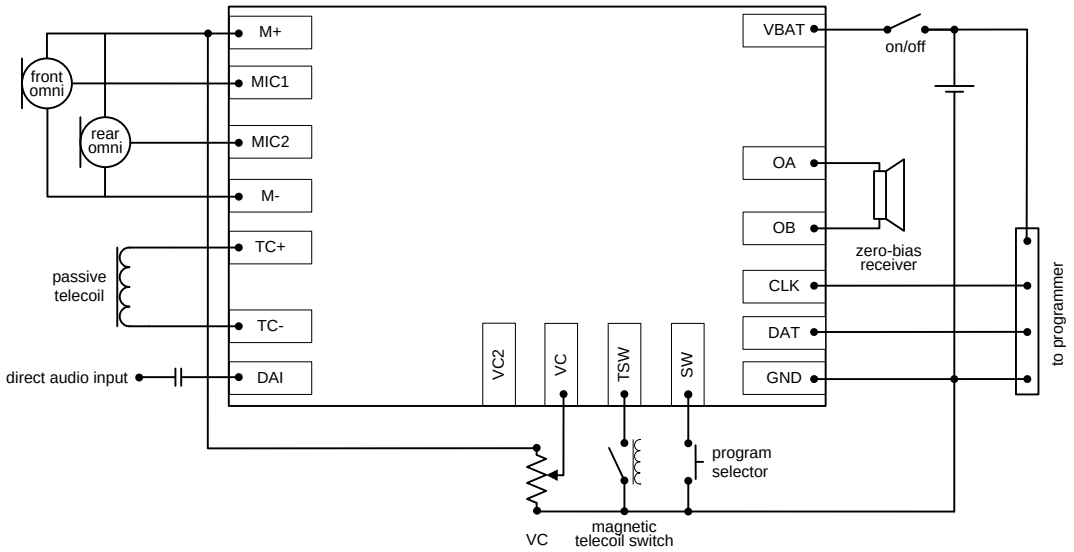

Wiring Schematic for simple programmable application

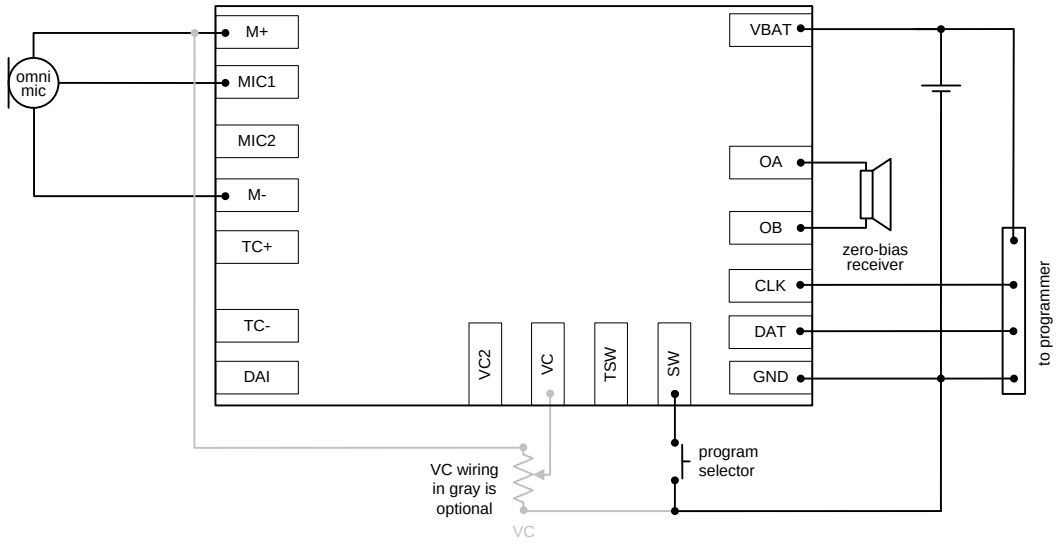

Wiring Schematic with Active Tcoil, VC, DAI, and MTO switch

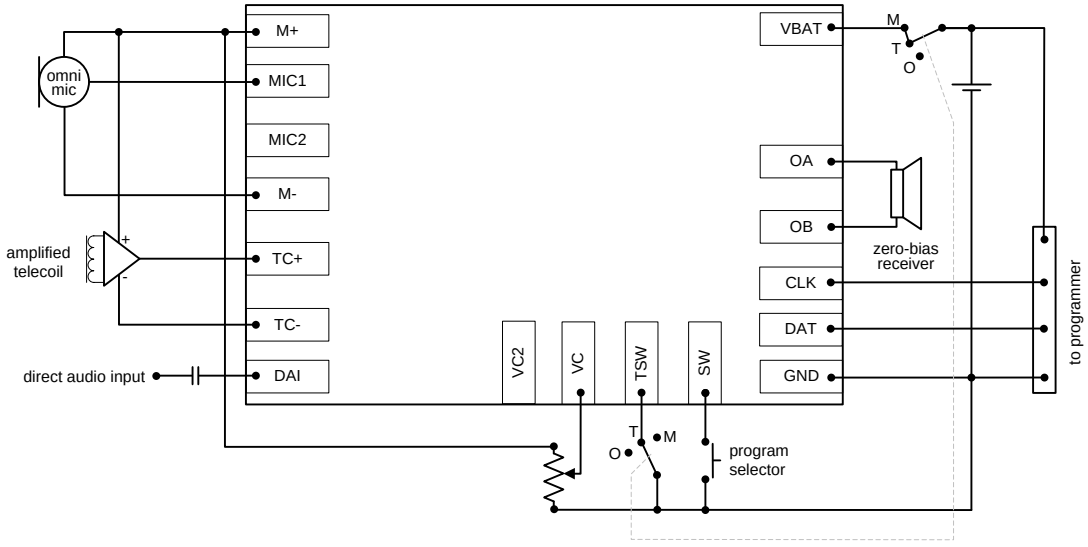

Applications

Wiring Schematic showing VC with Switch

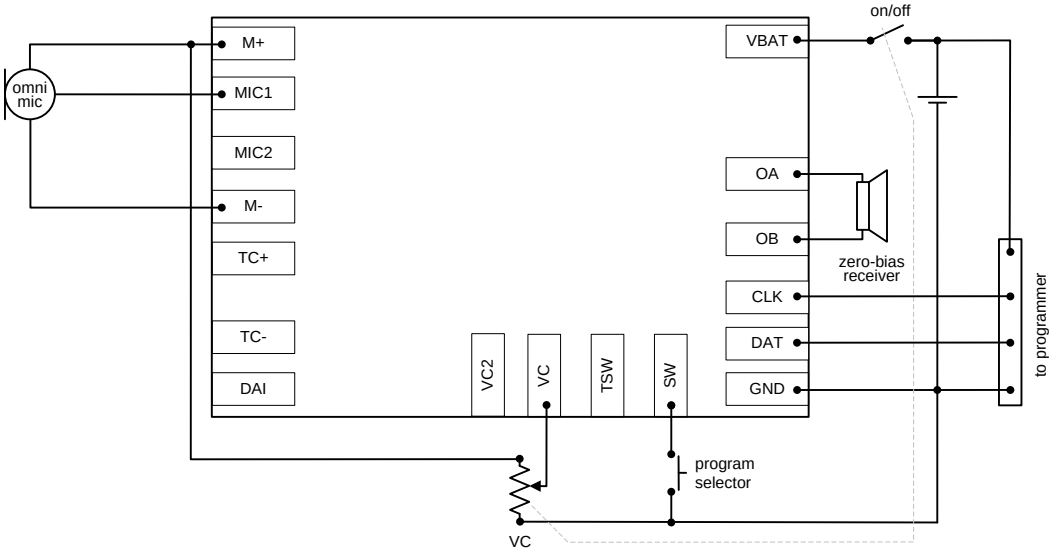

Wiring Schematic showing Digital VC

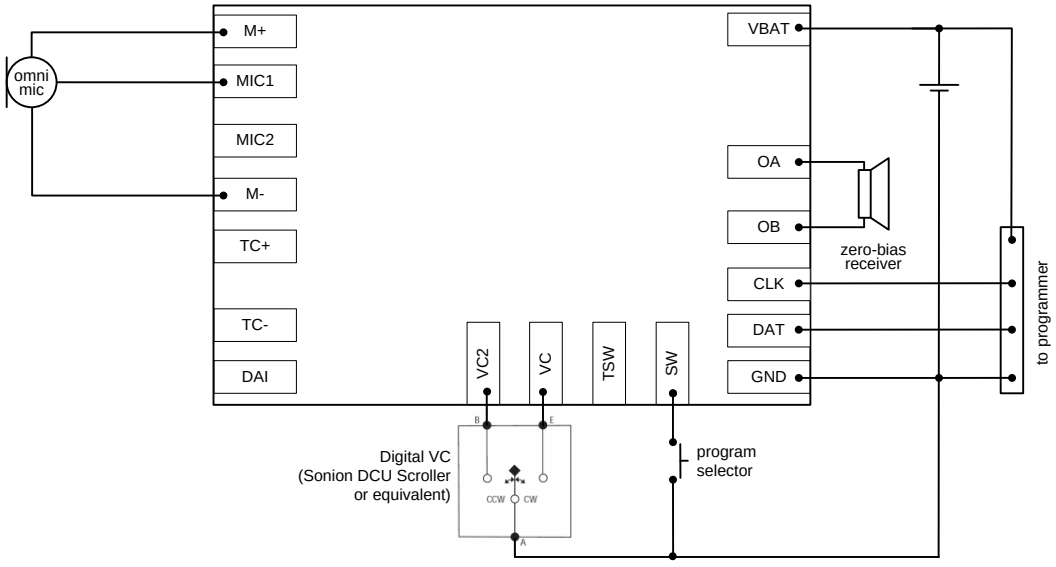

Programmer Wiring

Pin numbering of the DIN connector on the front of the HiPro, as seen facing the HiPro box

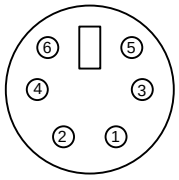

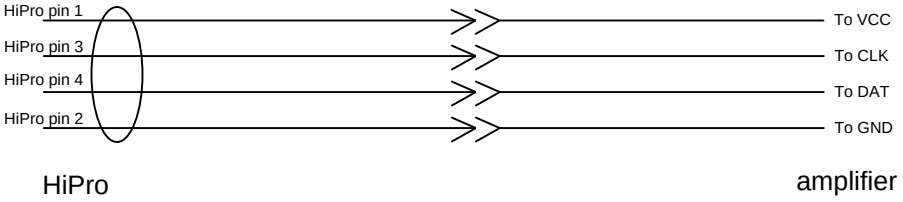

Soldering Information
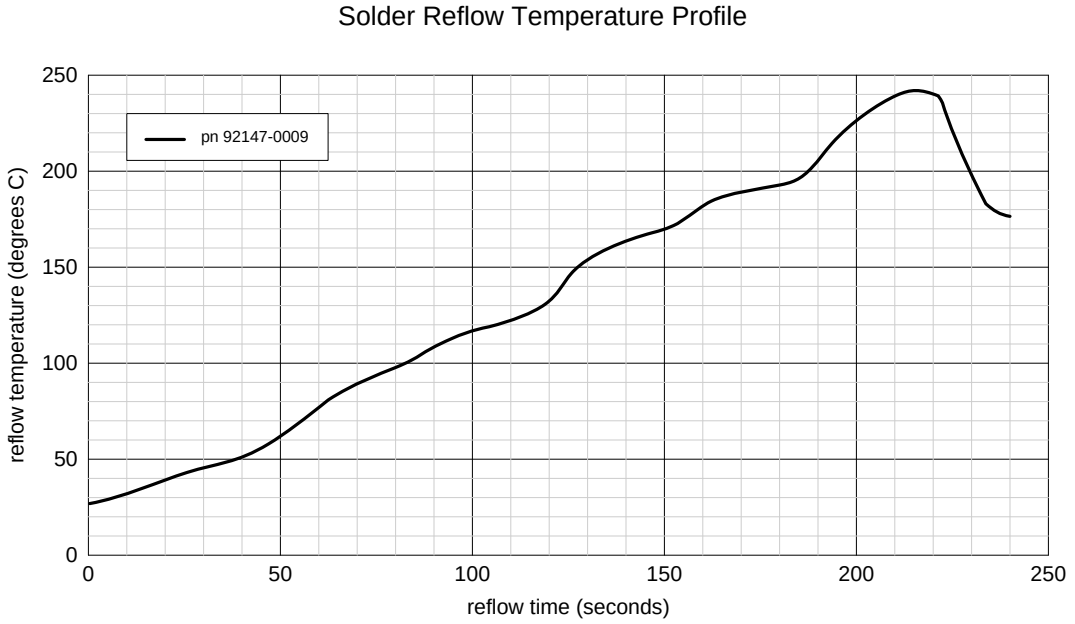
IntriCon Hybrid part number	Customer Attach process	Process Parameters	Max Hybrid Temp	Recommended materials to attach hybrid
92147-0009	Hand solder wire	Set iron tip temp to 650-715 F. Max dwell time of 2 second. Allow 10 seconds between solder operations	250 C	Use SAC 305 solder wire
92147-0009	Flip Chip	Reflow in convection oven – See profile below for recommended reflow temperature.	250 C	Print SAC 305 paste onto pads. Flip hybrid onto wet paste and reflow. Alternate method is to apply flux to the pads then flip hybrid onto fluxed pads and reflow. Recommended flux is Indalloy tac flux 009 (this is a water soluable flux.)